PRELIMINARY ISSUE ECN11-640 11.10.04

Work Order ID 73813

Friday, September 16, 2011 10:31:23 AM

Item ID: D3805-041 **Accept** **Setup Start** **Stop**

Revision ID:

Item Name: Wearplate Assembly Fwd, Low Gear

Start Date: 9/16/2011 **Start Qty:** 8.00 **Cust Item ID:**

Required Date: 10/7/2011 **Req'd Qty:** 8.00 **Customer:**

Reference:

Approvals: **Process Plan:** ____ **Date:** ____ **Tooling:** ____ **Date:** ____ **Run Start** **Stop**

QC: ____ **Date:** ____ **SPC (Y/N):** ____ **Date:** ____

Sequence ID/ Work Center ID	Operation Description	Set Up/ Run Hours	Tool ID	Tool #	Plan Code	Accept Qty	Reject Qty	Reject Number	Insp. Stamp
Draw Nbr	**Revision Nbr**								
D3805	~~A~~ ~~PB1~~ B 11.10.04 ECN11-640								
100		0.00							
Large Fab	**Memo**	0.00							
Large Fab	1- on D3806-1, fill cut outs with hardcoat welding rod as per dwg D3805 2059 B Hardcoat Welding Rod BATCH#: M 115807 2-weld D3806-1 to wearplate by positioning holes together as per dwg D3805 304 S.S. Welding Rod BATCH # M117659 3-Transfer drill holes in bar								
110	QC9- Inspect visual per QSI004- Fusion Welds	0.00							
QC	**Memo**	0.00							
Quality Control									

EL/JBL 11-9-28 XB

GP 11.09.29 XB

Dart Aerospace Ltd

W/O:		WORK ORDER CHANGES					
DATE	STEP	PROCEDURE CHANGE	By	Date	Qty	Approval Chief Eng / Prod Mgr	Approval QC Inspector

Part No: _____ **PAR #:** _____ **Fault Category:** _____ **NCR:** Yes No **DQA:** _____ **Date:** _____

Resolution: _____ **Disposition:** _____ **QA: N/C Closed:** _____ **Date:** _____

NCR:		WORK ORDER NON-CONFORMANCE (NCR)						
DATE	STEP	Description of NC Section A	Corrective Action Section B			Verification Section C	Approval Chief Eng	Approval QC Inspector
			Initial Chief Eng	Action Description Chief Eng	Sign & Date			

NOTE: Date & initial all entries

H:\fFORMS\Quality Assurance\approved QA\NCRWO RevE

Work Order ID 73813

Friday, September 16, 2011 10:31:23 AM

Item ID: D3805-041 **Accept** **Setup Start** **Stop**

Revision ID:

Item Name: Wearplate Assembly Fwd, Low Gear

Start Date: 9/16/2011 **Start Qty:** 8.00 **Cust Item ID:**

Required Date: 10/7/2011 **Req'd Qty:** 8.00 **Customer:**

Reference:

Run Start **Stop**

Approvals: **Process Plan:** _____ **Date:** _____ **Tooling:** _____ **Date:** _____

QC: _____ **Date:** _____ **SPC (Y/N):** _____ **Date:** _____

Sequence ID/ Work Center ID	Operation Description	Set Up/ Run Hours	Tool ID	Tool #	Plan Code	Accept Qty	Reject Qty	Reject Number	Insp. Stamp
120	QC5- Inspect part completeness to step on W/O	0.00				8			
QC	Memo	0.00							
Quality Control									
130	Grey Sandtex(Ref:4.3.5.6) per QSI005 4.3	0.00							
Powdercoat	Memo	0.00							
Powder Coating	START TIME: 2:15 OVEN TEMPERATURE: 320 0F FINISH TIME: 2:45								
M118489									
140	QC3- Inspect Part Finish	0.00							
QC	Memo	0.00							
Quality Control									

8 x 0 M 11/09/29

8 0 M 11/09/29

COUNTED

Dart Aerospace Ltd

W/O:		WORK ORDER CHANGES					
DATE	STEP	PROCEDURE CHANGE	By	Date	Qty	Approval Chief Eng / Prod Mgr	Approval QC Inspector

Part No: _____ **PAR #:** _____ **Fault Category:** _____ **NCR:** Yes No **DQA:** _____ **Date:** _____

Resolution: _____ **Disposition:** _____ **QA: N/C Closed:** _____ **Date:** _____

NCR:		WORK ORDER NON-CONFORMANCE (NCR)						
DATE	STEP	Description of NC Section A	Corrective Action Section B			Verification Section C	Approval Chief Eng	Approval QC Inspector
			Initial Chief Eng	Action Description Chief Eng	Sign & Date			

NOTE: Date & initial all entries

H:\fFORMS\Quality Assurance\approved QA\NCRWO RevE

Work Order ID 73813

Friday, September 16, 2011 10:31:23 AM

Item ID: D3805-041 **Accept** **Setup Start** **Stop**

Revision ID:

Item Name: Wearplate Assembly Fwd, Low Gear

Start Date: 9/16/2011 **Start Qty:** 8.00 **Cust Item ID:**

Required Date: 10/7/2011 **Req'd Qty:** 8.00 **Customer:**

Reference:

Run Start **Stop**

Approvals: **Process Plan:** _____ **Date:** _____ **Tooling:** _____ **Date:** _____

QC: _____ **Date:** _____ **SPC (Y/N):** _____ **Date:** _____

Sequence ID/ Work Center ID	Operation Description	Set Up/ Run Hours	Tool ID	Tool #	Plan Code	Accept Qty	Reject Qty	Reject Number	Insp. Stamp
150		0.00							
Small Fab	**Memo**	0.00							
Small Fab	1- Bond D3807-1 gasket to inner surface of wearplate using a thin layer of 3m 1300/1300L scotch grip adhesive as per dwg BATCH: M117780								
160	QC5- Inspect part completeness to step on W/O	0.00 to Rev PB1							
QC	**Memo**	0.00 Dry only							
Quality Control									
170	Identify as per dwg & Stock Location:_____	0.00							
Packaging	**Memo** FP	0.00							
Packaging									

Dart Aerospace Ltd

W/O:		WORK ORDER CHANGES					
DATE	STEP	PROCEDURE CHANGE	By	Date	Qty	Approval Chief Eng / Prod Mgr	Approval QC Inspector

Part No: _____ **PAR #:** _____ **Fault Category:** _____ **NCR:** Yes No **DQA:** _____ **Date:** _____

Resolution: _____ **Disposition:** _____ **QA: N/C Closed:** _____ **Date:** _____

NCR:		WORK ORDER NON-CONFORMANCE (NCR)						
DATE	STEP	Description of NC Section A	Corrective Action Section B			Verification Section C	Approval Chief Eng	Approval QC Inspector
			Initial Chief Eng	Action Description Chief Eng	Sign & Date			

NOTE: Date & initial all entries

H:\fFORMS\Quality Assurance\approved QA\NCRWO RevE

Work Order ID 73813

Friday, September 16, 2011 10:31:23 AM

Item ID: D3805-041 **Accept** **Setup Start**

Revision ID: **Stop**

Item Name: Wearplate Assembly Fwd, Low Gear

Start Date: 9/16/2011 **Start Qty:** 8.00 **Cust Item ID:**

Required Date: 10/7/2011 **Req'd Qty:** 8.00 **Customer:**

Reference:

Run Start

Stop

Approvals: **Process Plan:** _____ **Date:** _____ **Tooling:** _____ **Date:** _____

QC: _____ **Date:** _____ **SPC (Y/N):** _____ **Date:** _____

Sequence ID/ Work Center ID	Operation Description	Set Up/ Run Hours	Tool ID	Tool #	Plan Code	Accept Qty	Reject Qty	Reject Number	Insp. Stamp
180	QC21- Final Inspection - Work Order Release	0.00						11/10/5	
QC	**Memo**	0.00							
Quality Control									

11-10-05

POSITIVE RECALL
EFFECTIVE 11.09.22 AUTH
RELEASED DATE 11.10.05
ECN 11-640
11.10.04

Dart Aerospace Ltd

W/O:		WORK ORDER CHANGES					
DATE	STEP	PROCEDURE CHANGE	By	Date	Qty	Approval Chief Eng / Prod Mgr	Approval QC Inspector

Part No: _____ **PAR #:** _____ **Fault Category:** _____ **NCR:** Yes No **DQA:** _____ **Date:** _____

Resolution: _____ **Disposition:** _____ **QA: N/C Closed:** _____ **Date:** _____

NCR:		WORK ORDER NON-CONFORMANCE (NCR)						
DATE	STEP	Description of NC Section A	Corrective Action Section B			Verification Section C	Approval Chief Eng	Approval QC Inspector
			Initial Chief Eng	Action Description Chief Eng	Sign & Date			

NOTE: Date & initial all entries

H:\fFORMS\Quality Assurance\approved QA\NCRWO RevE

Picklist Print

Friday, September 16, 2011 10:31:20 AM

Work Order ID: 73813

Parent Item: D3805-041

Parent Item Name: Wearplate Assembly Fwd, Low Gear

Start Date: 9/16/2011 **Required Date:** 10/7/2011

Start Qty: 8.00 **Required Qty:** 8.00

Comments: IPP Rev:A 08-07-21 new issue DD verified by:EC IPP Rev:B 09-03-04 rev.a as per dwg DD verified by:EC

Component Item ID/ Item Name	Replacement Item ID	Mfg/ Purch	Bin Item	Primary Location	Last Location	Route Seq ID	Unit of Measure	Qty on Hand	Qty per Kit	Total Qty	Qty Issued	Date Issued	Status
D3805-1 Plate		Manufactured	No			100	Each	2.0000	1	8			
74047 x 8										EL	11-9-28		
				Location			Loc Qty		Loc Code				
				WA			2						
					69023		2						
D3806-1 Bar		Manufactured	No			100	Each	0.0000	1	8			
74165 x 8										EL	11-9-28		
D3807-1 Gasket		Manufactured	No			150	Each	5.0000	1	8			
										11/09/30			
				Location			Loc Qty		Loc Code				
				FP010			5						
					69022		5						

374056 (8x)

Dart Aerospace Ltd

W/O:		WORK ORDER CHANGES					
DATE	STEP	PROCEDURE CHANGE	By	Date	Qty	Approval Chief Eng / Prod Mgr	Approval QC Inspector

Part No: _____ **PAR #:** _____ **Fault Category:** _____ **NCR:** Yes No **DQA:** _____ **Date:** _____

Resolution: _____ **Disposition:** _____ **QA: N/C Closed:** _____ **Date:** _____

NCR:		WORK ORDER NON-CONFORMANCE (NCR)						
DATE	STEP	Description of NC Section A	Corrective Action Section B			Verification Section C	Approval Chief Eng	Approval QC Inspector
			Initial Chief Eng	Action Description Chief Eng	Sign & Date			

NOTE: Date & initial all entries

H:\fFORMS\Quality Assurance\approved QA\NCRWO RevE

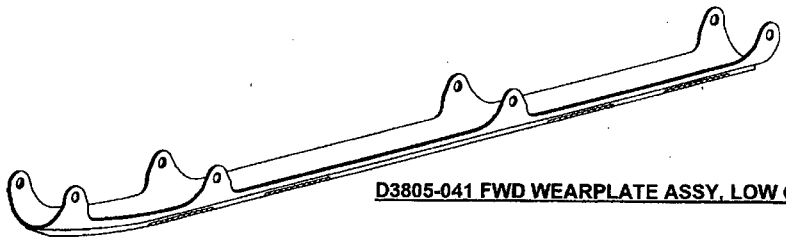

D3805-041 FWD WEARPLATE ASSY, LOW GEAR

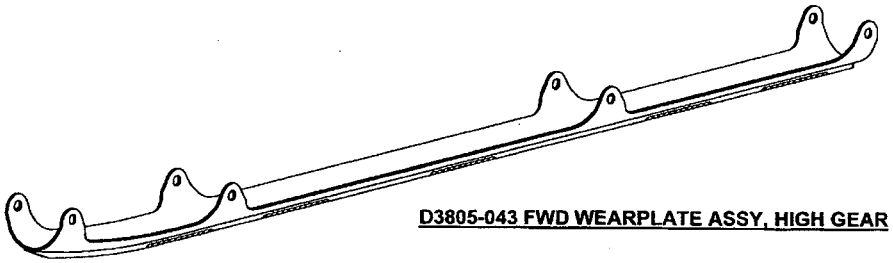

D3805-043 FWD WEARPLATE ASSY, HIGH GEAR

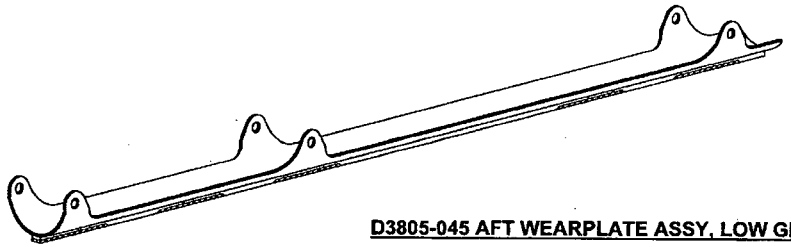

D3805-045 AFT WEARPLATE ASSY, LOW GEAR

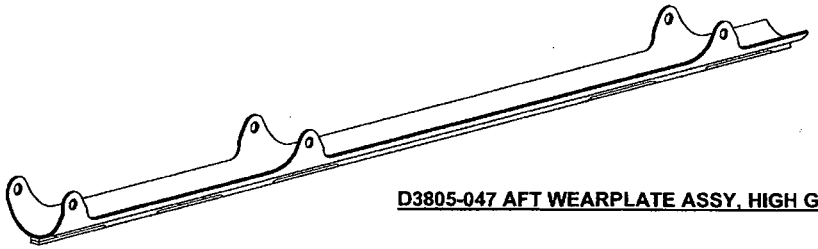

D3805-047 AFT WEARPLATE ASSY, HIGH GEAR

ITEM	QTY -041	QTY -043	QTY -045	QTY -047	P/N	DESCRIPTION
1	X				D3805-041	FWD WEARPLATE ASSY, LOW GEAR
2		X			D3805-043	FWD WEARPLATE ASSY, HIGH GEAR
3			X		D3805-045	AFT WEARPLATE ASSY, LOW GEAR
4				X	D3805-047	AFT WEARPLATE ASSY, HIGH GEAR
11	1				D3805-1	PLATE
12		1			D3805-3	PLATE
13			1		D3805-5	PLATE
14				1	D3805-7	PLATE
15	1				D3806-1	BAR
16		1			D3806-3	BAR
17			1		D3806-5	BAR
18				1	D3806-7	BAR
19	1				D3807-1	GASKET
20		1			D3807-3	GASKET
21			1		D3807-5	GASKET
22				1	D3807-7	GASKET
31	A/R	A/R	A/R	A/R	2059B	HARDCOAT
32	A/R	A/R	A/R	A/R	1300 (OR 1300L)	3M SCOTCH-GRIP ADHESIVE

WD-73813

RELEASED 2011-10-03

REV.	DESCRIPTION	BY	DATE
B	REVISED D3805-1F/-3F TO EASE MANUFACTURABILITY (ADDED CUTOUT AT FWD END OF PLATE PER PAR11-106) AND RE-ORGANIZED NOTES SHEETS 2 & 3	MB	11.09.16
A	NEW ISSUE	MB	08.11.21

DESIGN	
DRAWN	
CHECKED	
MFG. APPR.	
APPROVED	
DE APPR.	
DATE	11.09.16

DART AEROSPACE USA, INC.
KENT, WA

DRAWING NO. D3805 — REV. B — SHEET 1 OF 8

TITLE: WEARPLATE ASSY — SCALE: NTS

COPYRIGHT © 2008 BY DART AEROSPACE USA, INC.
THIS DOCUMENT IS PRIVATE AND CONFIDENTIAL AND IS SUPPLIED ON THE EXPRESS CONDITION THAT IT IS NOT TO BE USED FOR ANY PURPOSE OR COPIED OR COMMUNICATED TO ANY OTHER PERSON WITHOUT WRITTEN PERMISSION FROM DART AEROSPACE USA, INC.

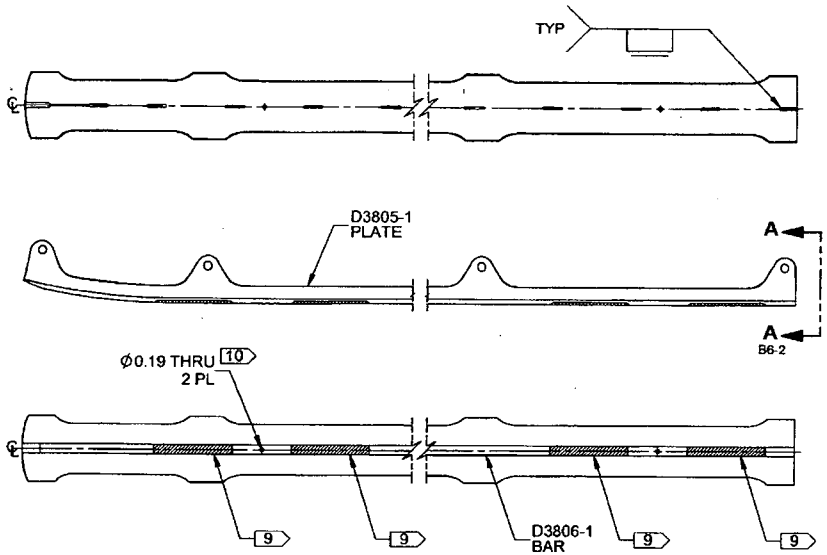

D3805-041 FWD WEARPLATE ASSY, LOW GEAR

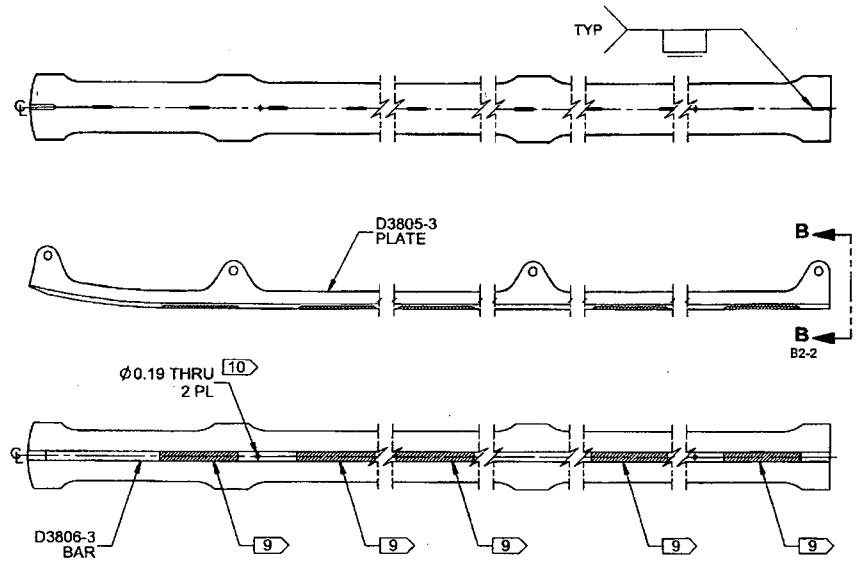

D3805-043 FWD WEARPLATE ASSY, HIGH GEAR

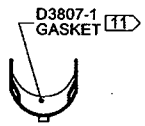

VIEW A-A C5-2

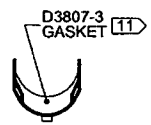

VIEW B-B C1-2

RELEASED
2011-10-03

NOTES: B
1) MATERIAL: N/A
2) FINISH: POWDER COAT "GREY SANDTEX" (4.3.5.6) PER DART QSI 005 4.3
3) TOLERANCES: PER DART QSI 018 UNLESS OTHERWISE NOTED
4) UNITS: INCHES UNLESS OTHERWISE NOTED
5) BREAK SHARP EDGES: N/A
6) IDENTIFICATION: IDENTIFY WITH DART P/N "D3805-04X" USING FINE POINT PERMANENT INK MARKER
7) WEIGHT: D3805-041 = 4.18 lbs; D3805-043 = 4.78 lbs
8) WELDING: PER QSI 004
9) 2059B HARDCOAT WELD, 0.19 THICK X 0.50 WIDE, FLUSH WITH D3806-X BAR ON ALL 3 SURFACES
10) AFTER WELDING, TRANSFER DRILL THRU BAR FROM PLATE
11) AFTER FINISH, BOND D3807-X GASKET TO INNER SURFACE OF WEARPLATE USING A THIN LAYER OF 3M 1300/1300L SCOTCH GRIP ADHESIVE

DESIGN		DART AEROSPACE USA, INC. KENT, WA
DRAWN		
CHECKED		DRAWING NO. D3805 — REV. B — SHEET 2 OF 8
MFG. APPR.		
APPROVED		TITLE WEARPLATE ASSY — SCALE NTS
DE APPR.		
DATE	11.09.16	

COPYRIGHT © 2008 BY DART AEROSPACE USA, INC.
THIS DOCUMENT IS PRIVATE AND CONFIDENTIAL AND IS SUPPLIED ON THE EXPRESS CONDITION THAT IT IS NOT TO BE USED FOR ANY PURPOSE OR COPIED OR COMMUNICATED TO ANY OTHER PERSON WITHOUT WRITTEN PERMISSION FROM DART AEROSPACE USA, INC.

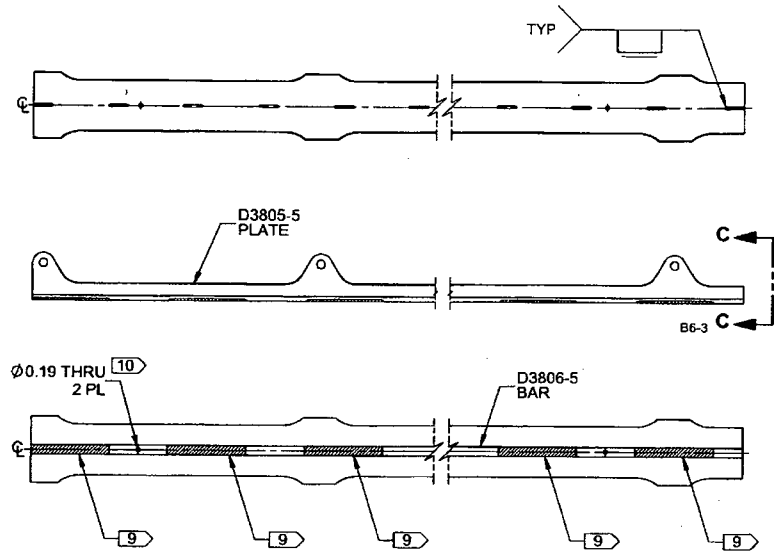

D3805-045 AFT WEARPLATE ASSY.

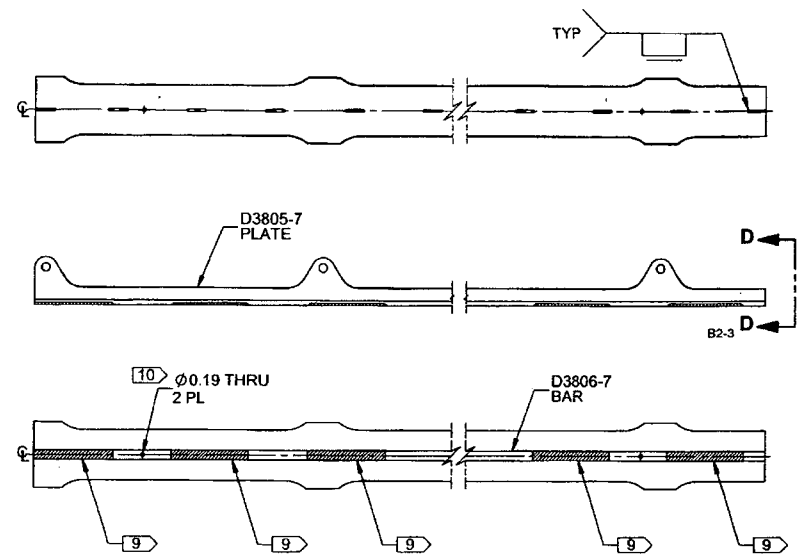

D3805-047 AFT WEARPLATE ASSY.

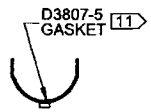

VIEW C-C C5-3

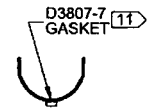

VIEW D-D C1-3

RELEASED
2011-10-03

NOTES: B
1) MATERIAL: N/A
2) FINISH: POWDER COAT "GREY SANDTEX" (4.3.5.6) PER DART QSI 005 4.3
3) TOLERANCES: PER DART QSI 018 UNLESS OTHERWISE NOTED
4) UNITS: INCHES UNLESS OTHERWISE NOTED
5) BREAK SHARP EDGES: N/A
6) IDENTIFICATION: IDENTIFY WITH DART P/N "D3805-04X" USING FINE POINT PERMANENT INK MARKER
7) WEIGHT: D3805-045 = 4.24 lbs; D3805-047 = 4.53 lbs
8) WELDING: PER QSI 004
9) 2059B HARDCOAT WELD, 0.19 THICK X 0.50 WIDE, FLUSH WITH D3806-X BAR ON ALL 3 SURFACES
10) AFTER WELDING, TRANSFER DRILL THRU BAR FROM PLATE
11) AFTER FINISH, BOND D3807-X GASKET TO INNER SURFACE OF WEARPLATE USING A THIN LAYER OF 3M 1300/1300L SCOTCH GRIP ADHESIVE

DESIGN		DART AEROSPACE USA, INC. KENT, WA	
DRAWN			
CHECKED		DRAWING NO. D3805	REV. B
MFG. APPR.			SHEET 3 OF 8
APPROVED		TITLE WEARPLATE ASSY	SCALE NTS
DE APPR.			
DATE	11.09.16		

COPYRIGHT © 2008 BY DART AEROSPACE USA, INC.
THIS DOCUMENT IS PRIVATE AND CONFIDENTIAL AND IS SUPPLIED ON THE EXPRESS CONDITION THAT IT IS NOT TO BE USED FOR ANY PURPOSE OR COPIED OR COMMUNICATED TO ANY OTHER PERSON WITHOUT WRITTEN PERMISSION FROM DART AEROSPACE USA, INC.

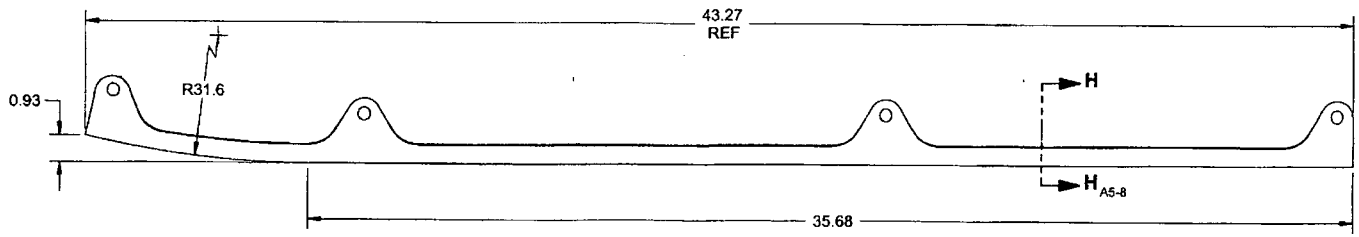

D3805-1 PLATE
(MAKE FROM D3805-1F)

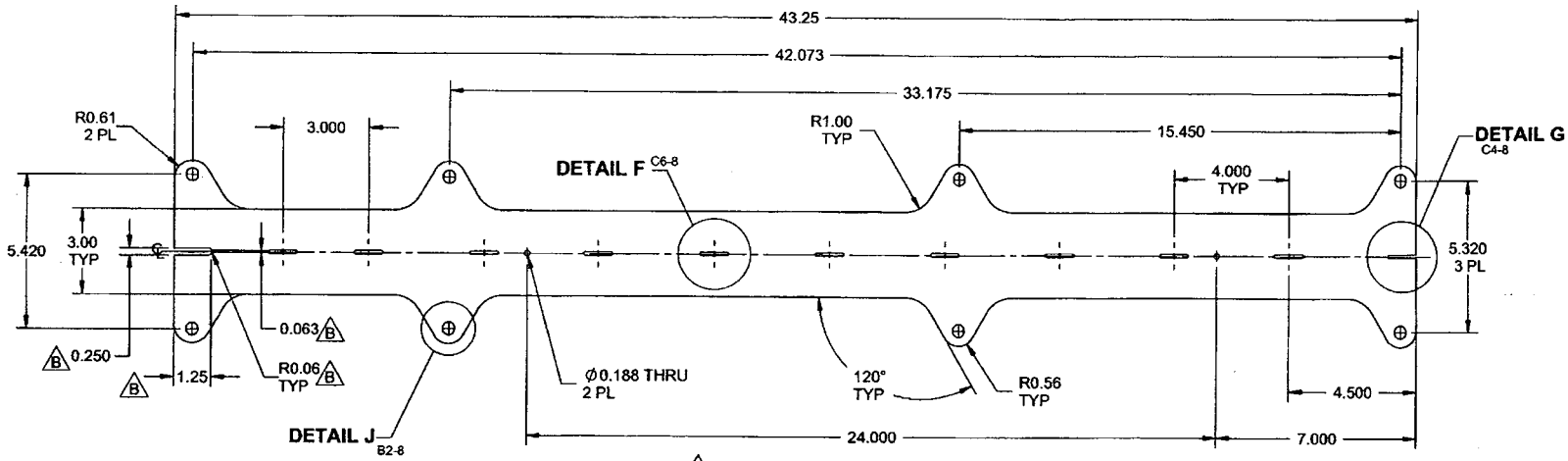

B **D3805-1F PLATE**

RELEASED
2011-10-03

NOTES:
1) MATERIAL: AISI 304/316 STAINLESS STEEL SHEET PER AMS 5513 OR 5524
18 GAUGE (0.050 THICK)
REF. DART SPEC. M304S18GA
2) FINISH: NONE
3) TOLERANCES: PER DART QSI 018 UNLESS OTHERWISE NOTED
4) UNITS: INCHES UNLESS OTHERWISE NOTED
5) BREAK SHARP EDGES: 0.005 TO 0.010 MAX
6) IDENTIFICATION: N/A
7) WEIGHT: 2.11 lbs

DESIGN		**DART AEROSPACE USA, INC.** KENT, WA
DRAWN		
CHECKED		DRAWING NO. D3805 — REV. B — SHEET 4 OF 8
MFG. APPR.		
APPROVED		TITLE: WEARPLATE ASSY — SCALE: NTS
DE APPR.		
DATE	11.09.16	

COPYRIGHT © 2009 BY DART AEROSPACE USA, INC.
THIS DOCUMENT IS PRIVATE AND CONFIDENTIAL AND IS SUPPLIED ON THE EXPRESS CONDITION THAT IT IS NOT TO BE USED FOR ANY PURPOSE OR COPIED OR COMMUNICATED TO ANY OTHER PERSON WITHOUT WRITTEN PERMISSION FROM DART AEROSPACE USA, INC.

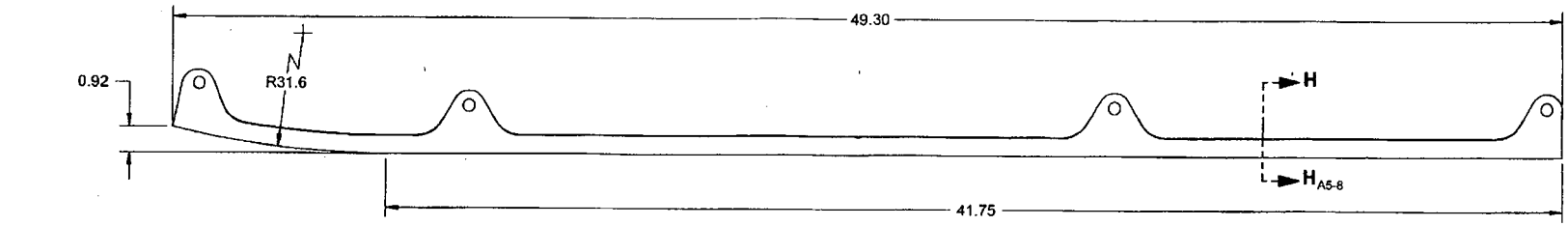

D3805-3 PLATE
(MAKE FROM D3805-3F)

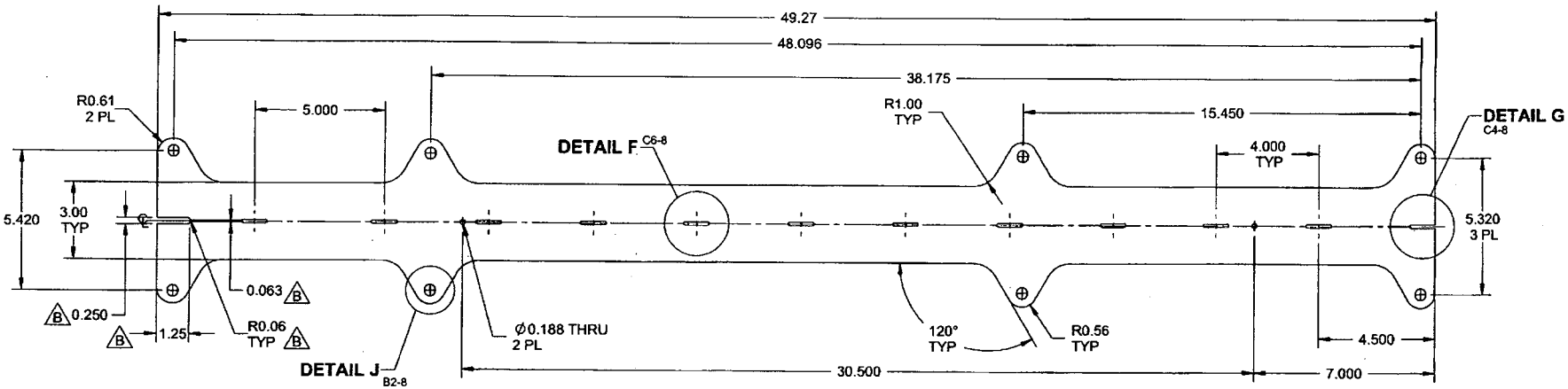

B **D3805-3F PLATE**

RELEASED
2011-10-03

NOTES:
1) MATERIAL: AISI 304/316 STAINLESS STEEL SHEET PER AMS 5513 OR 5524
18 GAUGE (0.050 THICK)
REF. DART SPEC. M304S18GA
2) FINISH: NONE
3) TOLERANCES: PER DART QSI 018 UNLESS OTHERWISE NOTED
4) UNITS: INCHES UNLESS OTHERWISE NOTED
5) BREAK SHARP EDGES: 0.005 TO 0.010 MAX
6) IDENTIFICATION: N/A
7) WEIGHT: 2.36 lbs

DESIGN		DART AEROSPACE USA, INC. KENT, WA
DRAWN		
CHECKED		DRAWING NO. D3805 — REV. B — SHEET 5 OF 8
MFG. APPR.		
APPROVED		TITLE WEARPLATE ASSY — SCALE NTS
DE APPR.		
DATE	11.09.16	

COPYRIGHT © 2008 BY DART AEROSPACE USA, INC.
THIS DOCUMENT IS PRIVATE AND CONFIDENTIAL AND IS SUPPLIED ON THE EXPRESS CONDITION THAT IT IS NOT TO BE USED FOR ANY PURPOSE OR COPIED OR COMMUNICATED TO ANY OTHER PERSON WITHOUT WRITTEN PERMISSION FROM DART AEROSPACE USA, INC.

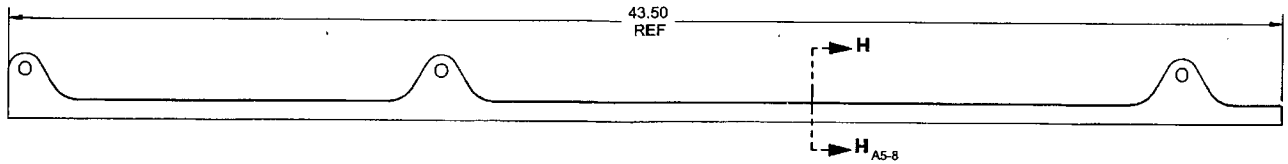

D3805-5 PLATE
(MAKE FROM D3805-5F)

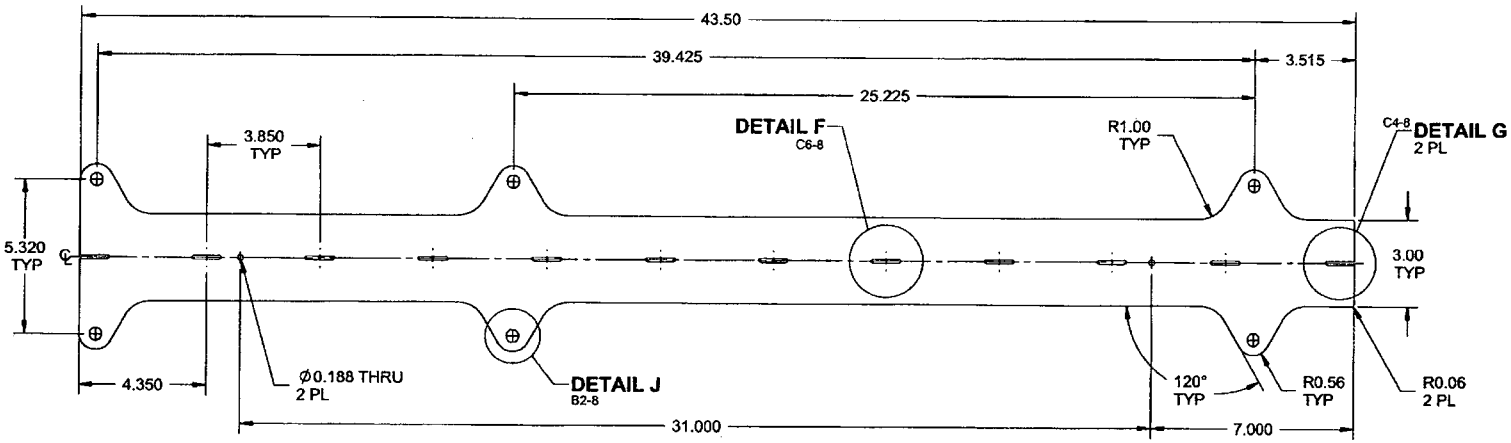

D3805-5F PLATE

RELEASED
2011-10-03

NOTES:
1) MATERIAL: AISI 304/316 STAINLESS STEEL SHEET PER AMS 5513 OR 5524
18 GAUGE (0.050 THICK)
REF. DART SPEC. M304S18GA
2) FINISH: NONE
3) TOLERANCES: PER DART QSI 018 UNLESS OTHERWISE NOTED
4) UNITS: INCHES UNLESS OTHERWISE NOTED
5) BREAK SHARP EDGES: 0.005 TO 0.010 MAX
6) IDENTIFICATION: N/A
7) WEIGHT: 2.06 lbs

DESIGN		DART AEROSPACE USA, INC. KENT, WA
DRAWN		
CHECKED		DRAWING NO. D3805 — REV. B — SHEET 6 OF 8
MFG. APPR.		
APPROVED		TITLE WEARPLATE ASSY — SCALE NTS
DE APPR.		
DATE	11.09.16	

COPYRIGHT © 2008 BY DART AEROSPACE USA, INC.
THIS DOCUMENT IS PRIVATE AND CONFIDENTIAL AND IS SUPPLIED ON THE EXPRESS CONDITION THAT IT IS NOT TO BE USED FOR ANY PURPOSE OR COPIED OR COMMUNICATED TO ANY OTHER PERSON WITHOUT WRITTEN PERMISSION FROM DART AEROSPACE USA, INC.

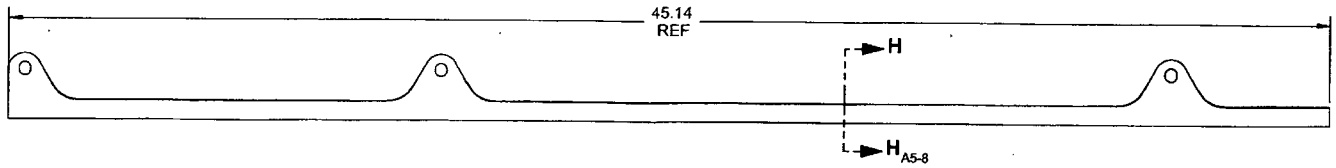

D3805-7 PLATE
(MAKE FROM D3805-7F)

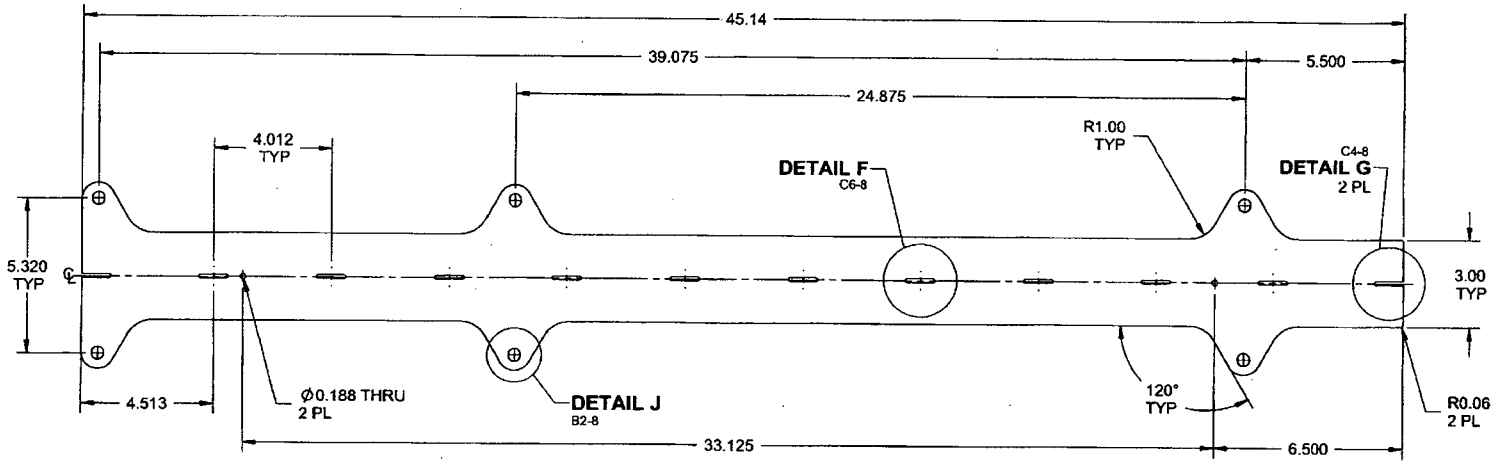

D3805-7F PLATE

RELEASED
2011-10-03

NOTES:
1) MATERIAL: AISI 304/316 STAINLESS STEEL SHEET PER AMS 5513 OR 5524
18 GAUGE (0.050 THICK)
REF. DART SPEC. M304S18GA
2) FINISH: NONE
3) TOLERANCES: PER DART QSI 018 UNLESS OTHERWISE NOTED
4) UNITS: INCHES UNLESS OTHERWISE NOTED
5) BREAK SHARP EDGES: 0.005 TO 0.010 MAX
6) IDENTIFICATION: N/A
7) WEIGHT: 2.13 lbs

DESIGN		DART AEROSPACE USA, INC. KENT, WA
DRAWN		
CHECKED		DRAWING NO. D3805 — REV. B — SHEET 7 OF 8
MFG. APPR.		
APPROVED		TITLE: WEARPLATE ASSY — SCALE: NTS
DE APPR.		
DATE	11.09.16	

COPYRIGHT © 2008 BY DART AEROSPACE USA, INC.
THIS DOCUMENT IS PRIVATE AND CONFIDENTIAL AND IS SUPPLIED ON THE EXPRESS CONDITION THAT IT IS NOT TO BE USED FOR ANY PURPOSE OR COPIED OR COMMUNICATED TO ANY OTHER PERSON WITHOUT WRITTEN PERMISSION FROM DART AEROSPACE USA, INC.

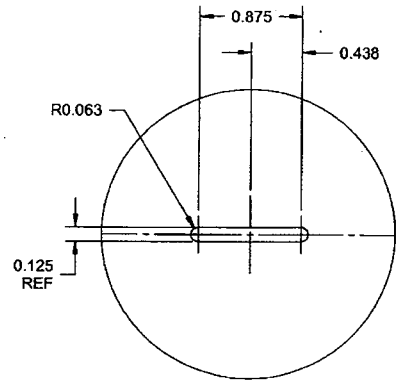

DETAIL F C5-4 C5-5 C4-6 C4-7
SLOT DETAIL TYP
SCALE 4X

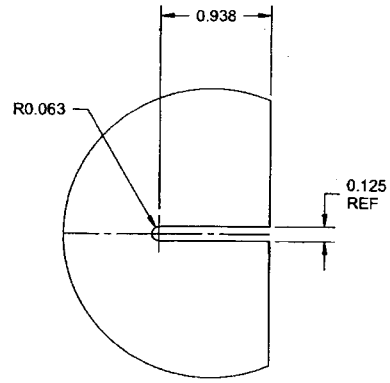

DETAIL G C1-4 C1-5 C1-6 C2-7
SLOT DETAIL TYP
SCALE 4X

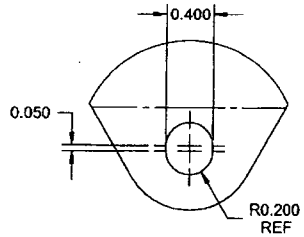

DETAIL J B6-4 B7-5 B5-6 B5-7
SCALE 4X

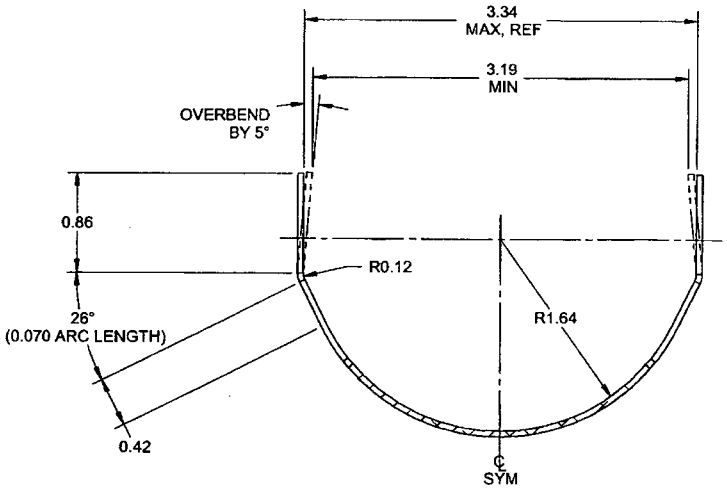

SECTION H-H D3-4 D3-5 D3-6 D3-7
SCALE 4X

RELEASED
2011-10-03

DESIGN		**DART AEROSPACE USA, INC.** KENT, WA
DRAWN		
CHECKED		DRAWING NO. D3805 — REV. B — SHEET 8 OF 8
MFG. APPR.		
APPROVED		TITLE: WEARPLATE ASSY — SCALE: NTS
DE APPR.		
DATE	11.09.16	

COPYRIGHT © 2008 BY DART AEROSPACE USA, INC.
THIS DOCUMENT IS PRIVATE AND CONFIDENTIAL AND IS SUPPLIED ON THE EXPRESS CONDITION THAT IT IS NOT TO BE USED FOR ANY PURPOSE OR COPIED OR COMMUNICATED TO ANY OTHER PERSON WITHOUT WRITTEN PERMISSION FROM DART AEROSPACE USA, INC.